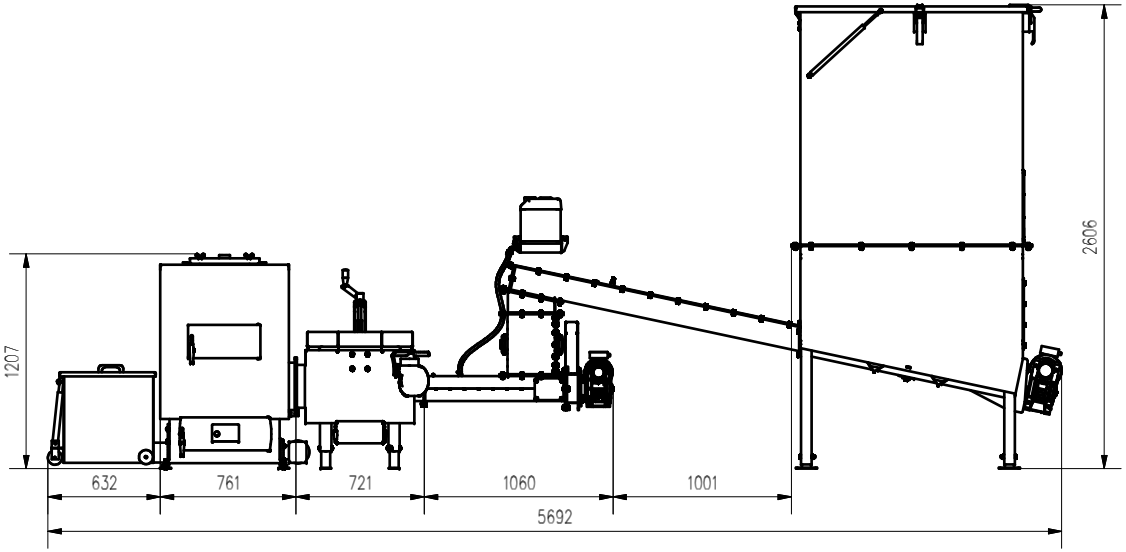

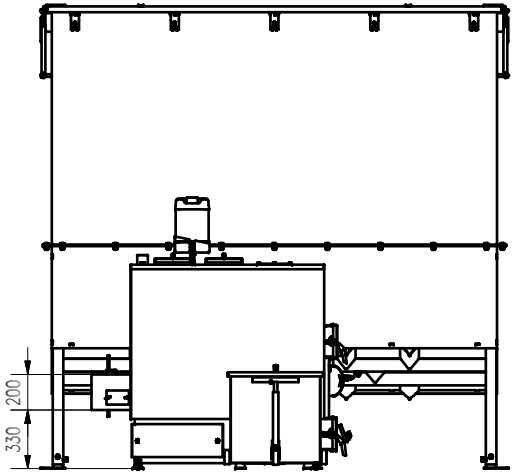

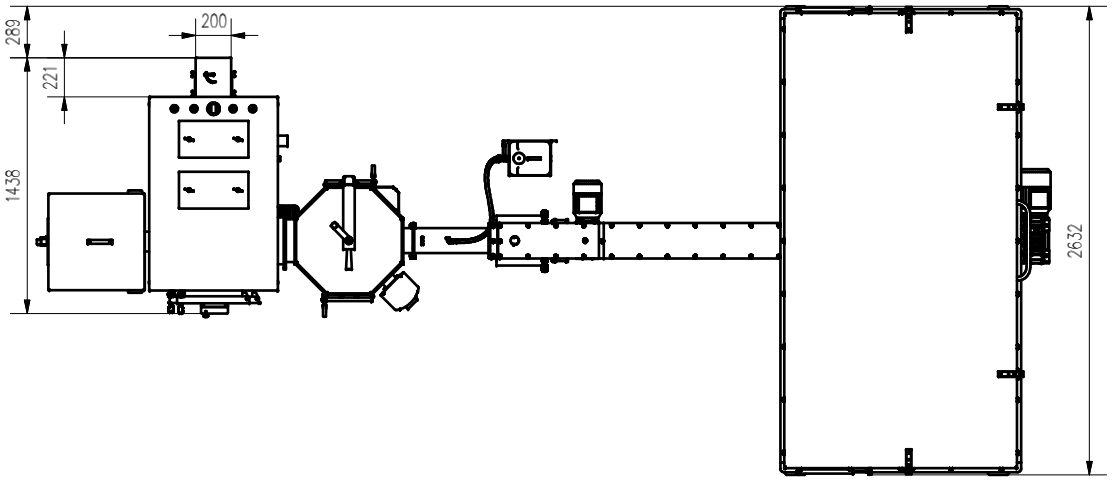

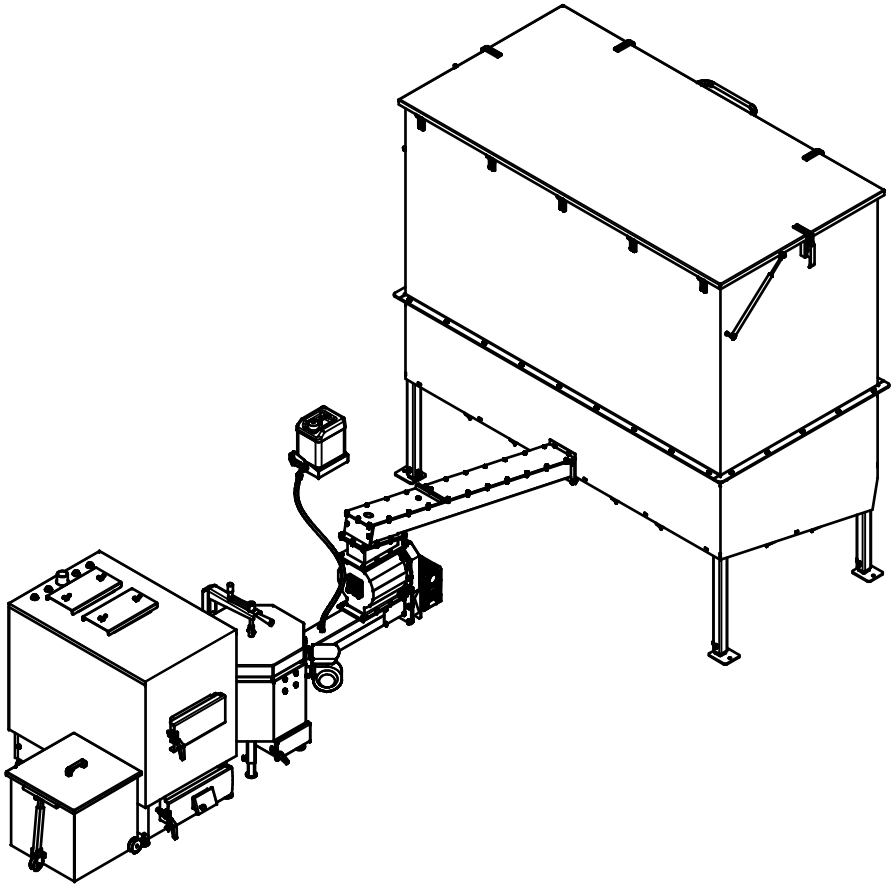

AZSB50GC 6m3 P SUP